PRODUCT DATASHEET

43F-R-NF

Coaxial Adapter 4.3-10 Female - N Female with right angle

Coaxial Adapter 4.3-10 Female - N Female with right angle

FEATURES / BENEFITS

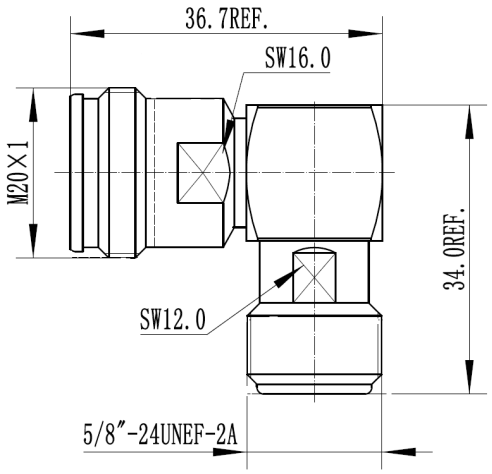

External Document Links

Notes

Technical features

STRUCTURE

Product Line		Coaxial Cable Components
Product Type		Coaxial Adapter

MECHANICAL SPECIFICATIONS

Connector A		4.3-10 Female
Center Contact Connector A		Copper Alloy, silver plated
Outer Contact Connector A		Copper Alloy, CuSnZn plated
Connector B		N Female
Center Contact Connector B		Copper Alloy, silver plated
Outer Contact Connector B		Copper Alloy, CuSnZn plated
Dielectric		PTFE
Sealing class		IP68, connected

ELECTRICAL SPECIFICATIONS

Frequency Range - MHz		DC - 6000
VSWR, Return Loss	VSWR (dB)	DC TO 2 GHz VSWR 1.05 (32.25) 2 TO 3 GHz VSWR 1.08 (28.3) 3 TO 6 GHz VSWR 1.12 (24.94)
Insertion Loss, dB (Max)	dB	0.05
3rd Order IM Product @ 2x20 Watts	dBc	< -163

TEMPERATURE SPECIFICATIONS

Operation Temperature	°C (°F)	-40 to 85 (-40 to 185)

PACKAGING INFORMATION

Package Quantity		1

All values nominal unless tolerances provided; information contained in the present datasheet is subject to confirmation at time of ordering

All values nominal unless tolerances provided; information contained in the present datasheet is subject to confirmation at time of ordering