PRODUCT DATASHEET

43M-NF

Coaxial Adapter 4.3-10 Male - N Female

Coaxial Adapter, 4.3-10 Male / N Female

FEATURES / BENEFITS

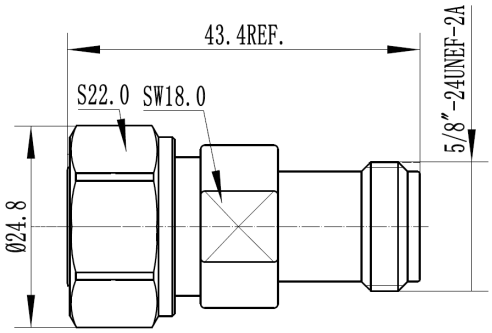

External Document Links

Notes

Technical features

STRUCTURE

Product Line		Coaxial Cable Components
Product Type		Coaxial Adapter

MECHANICAL SPECIFICATIONS

Connector A		4.3-10 Male
Center Contact Connector A		Copper Alloy, Silver plated
Outer Contact Connector A		Copper Alloy, CuSnZn plated
Connector B		N Female
Center Contact Connector B		Copper Alloy, Silver plated
Outer Contact Connector B		Copper Alloy, CuSnZn plated
Dielectric		PTFE
Gasket		Silicone rubber
Sealing class		IP68, connected

ELECTRICAL SPECIFICATIONS

Frequency Range - MHz		DC - 6000
VSWR, Return Loss	VSWR (dB)	DC - 2000 MHz: 1.04 (34.15) 2000 - 3000 MHz: 1.06 (30.71) 3000 - 6000 MHz: 1.10 (26.44)
Insertion Loss, dB (Max)	dB	0.05
3rd Order IM Product @ 2x20 Watts	dBc	< -163

TEMPERATURE SPECIFICATIONS

Operation Temperature	°C (°F)	-45 to 85 (-49 to 185)

PACKAGING INFORMATION

Package Quantity		1

All values nominal unless tolerances provided; information contained in the present datasheet is subject to confirmation at time of ordering