PRODUCT DATASHEET

716F-43F

Coaxial Adapter 7-16 Female - 4.3-10 Female

Coaxial Adapter, 7-16 Female / 4.3-10 Female

FEATURES / BENEFITS

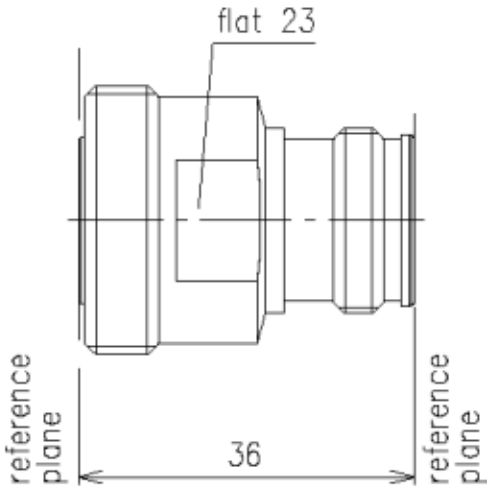

External Document Links

Notes

Technical features

STRUCTURE

Product Line		Coaxial Cable Components
Product Type		Coaxial Adapter

MECHANICAL SPECIFICATIONS

Connector A		7-16 DIN Female
Center Contact Connector A		Phosphor Bronze, Silver plated
Outer Contact Connector A		Phosphor Bronze, Tri metal alloy plated
Connector B		4.3-10 Female
Center Contact Connector B		Phosphor Bronze, Silver plated
Outer Contact Connector B		Phosphor Bronze, Tri metal alloy plated
Dielectric		PTFE
Gasket		Silicone rubber
Sealing class		IP68, connected

ELECTRICAL SPECIFICATIONS

Frequency Range - MHz		DC - 6000
VSWR, Return Loss	VSWR (dB)	DC - 2000 MHz: 1.04 (34.15) 2000 - 3000 MHz: 1.06 (30.71) 3000 - 6000 MHz: 1.10 (26.44)
Insertion Loss, dB (Max)	dB	0.05
3rd Order IM Product @ 2x20 Watts	dBc	< -163

TEMPERATURE SPECIFICATIONS

Operation Temperature	°C (°F)	-45 to 85 (-49 to 185)

All values nominal unless tolerances provided; information contained in the present datasheet is subject to confirmation at time of ordering

PACKAGING INFORMATION

Package Quantity		1

All values nominal unless tolerances provided; information contained in the present datasheet is subject to confirmation at time of ordering