PRODUCT DATASHEET

# 716F-R-43F

Coaxial Adapter 7-16 Female - 4.3-10 Female with right angle

Coaxial Adapter 7-16 Female - 4.3-10 Female with right angle

FEATURES / BENEFITS

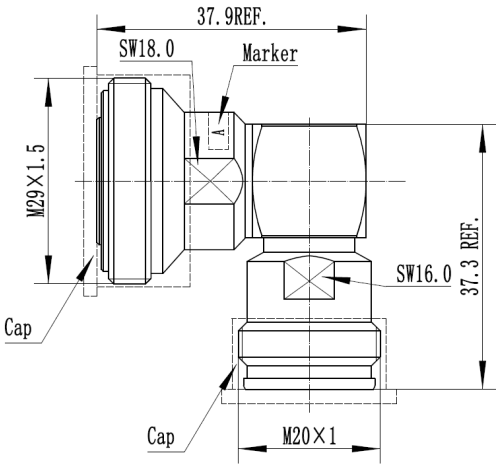


External Document Links

Notes

## Technical features

### STRUCTURE

| | | |
|---|---|---|
| **Product Line** | | Coaxial Cable Components |
| **Product Type** | | Coaxial Adapter |

### MECHANICAL SPECIFICATIONS

| | | |
|---|---|---|
| **Connector A** | | 7-16 Female |
| **Center Contact Connector A** | | Phosphor Bronze, silver plated |
| **Outer Contact Connector A** | | Brass, Tri metal alloy plated |
| **Connector B** | | 4.3-10 Female |
| **Center Contact Connector B** | | Phosphor Bronze, silver plated |
| **Outer Contact Connector B** | | Brass, Tri metal alloy plated |
| **Dielectric** | | PTFE |
| **Sealing class** | | IP68, connected |

### ELECTRICAL SPECIFICATIONS

| | | |
|---|---|---|
| **Frequency Range - MHz** | | DC - 6000 |
| **VSWR, Return Loss** | VSWR (dB) | DC TO 2 GHz VSWR 1.05 (32.25)<br>2 TO 3 GHz VSWR 1.08 (28.3)<br>3 TO 6 GHz VSWR 1.12 (24.94) |
| **Insertion Loss, dB (Max)** | dB | 0.05 |
| **3rd Order IM Product @ 2x20 Watts** | dBc | < -163 |

### TEMPERATURE SPECIFICATIONS

| | | |
|---|---|---|
| **Operation Temperature** | °C (°F) | -40 to 85 (-40 to 185) |

### PACKAGING INFORMATION

| | | |
|---|---|---|
| **Package Quantity** | | 1 |




All values nominal unless tolerances provided; information contained in the present datasheet is subject to confirmation at time of ordering

All values nominal unless tolerances provided; information contained in the present datasheet is subject to confirmation at time of ordering