PRODUCT DATASHEET

APXVB4LTY16AB_43-C-I20

Hybrid FDD/TDD Antenna, X-Pol, 1.6m, 10-ports FDD 1x 698-960/4x 1710-2690, 65deg, 8T8R 3300-3800MHz, 90deg unit beam, Integrated RET

FEATURES / BENEFITS

- 2 ports / 1 cross pol system in low band (698-960MHz)
- 8 ports / 4 cross pol systems in high band (1710-2690MHz)
- 8 ports / 4 cross pol systems in high band (3300-3800MHz)
- Integrated and field replaceable SRET
- ACU HW Version: 2.02
- Compliant with AISG V2.0 and 3GPP

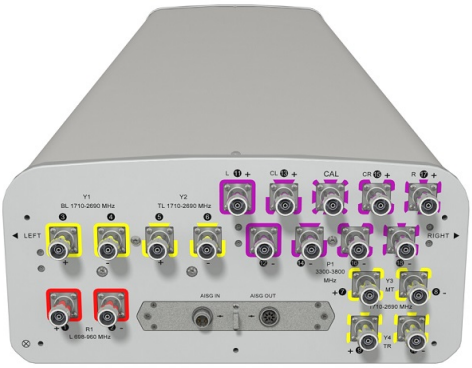

Technical features

ELECTRICAL SPECIFICATIONS

Electrical Specification Header		Low Band Array (698-960 MHz) [R1]		
Frequency Band	MHz	698-806	790-894	880-960
Gain Typical	dBi	14.1	14.9	15.3
Gain Over all Tilts	dBi	13.6 +/- 0.5	14.4 +/- 0.5	14.8 +/- 0.5
Azimuth Beamwidth 3dB	Deg	66.8 +/- 3.4	68.4 +/- 3	66.4 +/- 4.3
Elevation Beamwidth 3dB	Deg	16 +/- 1.5	13.5 +/- 0.8	12.8 +/- 1
Cross Polar Discrimination at Boresight	dB	18.8	22	22
Cross Polar Discrimination over Sector	dB	3.6	6.8	8
F/B at +/-30deg Total Power	dB	17.9	20.5	21
First Upper Side Lobe Suppression	dB	15.8	13	13
Electrical Downtilt	Deg	2 to 14		
Cross Polar Isolation	dB	25		
Interband Isolation	dB	25		
VSWR	-	1.5		
Passive Intermodulation (3rd Order, 2 x 43dBm)	dBc	-150		
Maximum Effective Power per Port	Watt	350		

All values nominal unless tolerances provided; information contained in the present datasheet is subject to confirmation at time of ordering.

APXVB4LTY16AB_43-C-I20

Hybrid FDD/TDD Antenna, X-Pol, 1.6m, 10-ports FDD 1x 698-960/4x 1710-2690, 65deg, 8T8R 3300-3800MHz, 90deg unit beam, Integrated RET

ELECTRICAL SPECIFICATIONS

Electrical Specification Header		High Band Array (1710-2690 MHz) [Y1]				
Frequency Band	MHz	1710 - 1880	1850 - 1990	1920 - 2170	2300 - 2400	2490 - 2690
Gain Typical	dBi	13.8	14	15	15.3	15.8
Gain Over all Tilts	dBi	13.3 +/- 0.5	13.5 +/- 0.5	14 +/- 1	14.6 +/- 0.7	14.8 +/- 1
Azimuth Beamwidth 3dB	Deg	68.9 +/- 6.8	64.8 +/- 6.7	63.8 +/- 6.7	56.5 +/- 4.6	53.4 +/- 6.2
Elevation Beamwidth 3dB	Deg	12 +/- 2	11.1 +/- 1	10.1 +/- 1	9.4 +/- 0.6	8.7 +/- 0.5
Cross Polar Discrimination at Boresight	dB	16.4	18	17	16	14
Cross Polar Discrimination over Sector	dB	6.9	9	6	1	0.1
F/B at +/-30deg Total Power	dB	16.9	17.6	18	18.4	19
First Upper Side Lobe Suppression	dB	15	13	11	9.7	7
Electrical Downtilt	Deg	2 to 12				
Cross Polar Isolation	dB	25				
Interband Isolation	dB	25				
VSWR	-	1.5				
Passive Intermodulation (3rd Order, 2 x 43dBm)	dBc	-150				
Maximum Effective Power per Port	Watt	250				

All values nominal unless tolerances provided; information contained in the present datasheet is subject to confirmation at time of ordering.

APXVB4LTY16AB_43-C-I20

Hybrid FDD/TDD Antenna, X-Pol, 1.6m, 10-ports FDD 1x 698-960/4x 1710-2690, 65deg, 8T8R 3300-3800MHz, 90deg unit beam, Integrated RET

ELECTRICAL SPECIFICATIONS

Electrical Specification Header		High Band Array (1710-2690 MHz) [Y2]				
Frequency Band	MHz	1710-1880	1850-1990	1920-2170	2300-2400	2490-2690
Gain Typical	dBi	13.4	13.9	15.3	15.8	16
Gain Over all Tilts	dBi	12.7 +/- 0.7	12.9 +/- 1	13.8 +/- 1.5	14.8 +/- 1	15 +/- 1
Azimuth Beamwidth 3dB	Deg	66.3 +/- 7.2	66.5 +/- 6.3	66 +/- 5.4	54 +/- 3.7	50.5 +/- 4.5
Elevation Beamwidth 3dB	Deg	12.1 +/- 1	11.7 +/- 1	10.8 +/- 1	9.3 +/- 0.5	8.7 +/- 0.5
Cross Polar Discrimination at Boresight	dB	19	19	14.3	13.8	12.4
Cross Polar Discrimination over Sector	dB	7	8	9	1	1
F/B at +/-30deg Total Power	dB	18	16	16.8	17.9	18
First Upper Side Lobe Suppression	dB	11	13.8	12	13	12
Electrical Downtilt	Deg	2 to 12				
Cross Polar Isolation	dB	25				
Interband Isolation	dB	25				
VSWR	-	1.5				
Passive Intermodulation (3rd Order, 2 x 43dBm)	dBc	-150				
Maximum Effective Power per Port	Watt	250				

All values nominal unless tolerances provided; information contained in the present datasheet is subject to confirmation at time of ordering.

APXVB4LTY16AB_43-C-I20

Hybrid FDD/TDD Antenna, X-Pol, 1.6m, 10-ports FDD 1x 698-960/4x 1710-2690, 65deg, 8T8R 3300-3800MHz, 90deg unit beam, Integrated RET

ELECTRICAL SPECIFICATIONS

Electrical Specification Header		High Band Array (1710-2690 MHz) [Y3]				
Frequency Band	MHz	1710-1880	1850-1990	1920-2170	2300-2400	2490-2690
Gain Typical	dBi	14.8	14.9	15.9	15.1	16.1
Gain Over all Tilts	dBi	13.8 +/- 1	14.3 +/- 0.6	14.9 +/- 1	14.6 +/- 0.5	14.8 +/- 1.3
Azimuth Beamwidth 3dB	Deg	68.5 +/- 5.7	66.7 +/- 4	62.3 +/- 6.5	60.6 +/- 2.5	54.8 +/- 4.5
Elevation Beamwidth 3dB	Deg	13.3 +/- 1	12.6 +/- 0.5	11.7 +/- 1	10.5 +/- 0.5	9.8 +/- 1
Cross Polar Discrimination at Boresight	dB	19.1	19.1	19	24.8	20.8
Cross Polar Discrimination over Sector	dB	9	8.5	7	7	2.1
F/B at +/-30deg Total Power	dB	21	20	20	19.7	21
First Upper Side Lobe Suppression	dB	13.6	14.9	14	14.9	14
Electrical Downtilt	Deg	2 to 12				
Cross Polar Isolation	dB	25				
Interband Isolation	dB	25				
VSWR	-	1.5				
Passive Intermodulation (3rd Order, 2 x 43dBm)	dBc	-150				
Maximum Effective Power per Port	Watt	250				

All values nominal unless tolerances provided; information contained in the present datasheet is subject to confirmation at time of ordering.

APXVB4LTY16AB_43-C-I20

Hybrid FDD/TDD Antenna, X-Pol, 1.6m, 10-ports FDD 1x 698-960/4x 1710-2690, 65deg, 8T8R 3300-3800MHz, 90deg unit beam, Integrated RET

ELECTRICAL SPECIFICATIONS

Electrical Specification Header		High Band Array (1710-2690 MHz) [Y4]				
Frequency Band	MHz	1710-1880	1850-1990	1920-2170	2300-2400	2490-2690
Gain Typical	dBi	14.4	14.9	16.1	15.8	15.9
Gain Over all Tilts	dBi	13.9 +/- 0.5	14.4 +/- 0.5	15.1 +/- 1	14.9 +/- 0.9	14.9 +/- 1
Azimuth Beamwidth 3dB	Deg	73.1 +/- 4.1	69.3 +/- 3.5	65.6 +/- 4	58.6 +/- 3.5	56.4 +/- 3.5
Elevation Beamwidth 3dB	Deg	13.2 +/- 1	12.6 +/- 0.5	11.9 +/- 1	10.5 +/- 0.5	9.6 +/- 0.7
Cross Polar Discrimination at Boresight	dB	19.7	22.9	20	18.6	20.4
Cross Polar Discrimination over Sector	dB	11	12	13	6.7	2
F/B at +/-30deg Total Power	dB	22.4	22.4	22	20	21
First Upper Side Lobe Suppression	dB	13	13.6	12.1	14.4	13
Electrical Downtilt	Deg	2 to 12				
Cross Polar Isolation	dB	25				
Interband Isolation	dB	25				
VSWR	-	1.5				
Passive Intermodulation (3rd Order, 2 x 43dBm)	dBc	-150				
Maximum Effective Power per Port	Watt	250				

ELECTRICAL SPECIFICATIONS

Electrical Specification Header		Cal. board and S parameter (3300-3800 MHz) [P1]	
Frequency Band	MHz	3300-3600	3600-3800
Coupling between cal. Port to input port	dB	-26+/-2	
Coupling amplitude accuracy	dB	≤ 0.9	
Coupling phase accuracy	deg	≤ 7	
VSWR	-	≤ 1.5	
Maximum Power	Watt	50	
ISO co-polor @ 2-6 deg tilt	dB	≥ 19	
ISO co-polor @ 7-12 deg tilt	dB	≥ 25	
ISO cross-polor @ 2-6 deg tilt	dB	≥ 24	
ISO cross-polor @ 7-12 deg tilt	dB	≥ 25	

All values nominal unless tolerances provided; information contained in the present datasheet is subject to confirmation at time of ordering.

APXVB4LTY16AB_43-C-I20

Hybrid FDD/TDD Antenna, X-Pol, 1.6m, 10-ports FDD 1x 698-960/4x 1710-2690, 65deg, 8T8R 3300-3800MHz, 90deg unit beam, Integrated RET

Amphenol ANTENNA SOLUTIONS

ELECTRICAL SPECIFICATIONS

Electrical Specification Header		Radiation Parameter - Unit Beam (3300-3800 MHz) [P1]	
Frequency Band	MHz	3300-3600	3600-3800
Gain Typical	dBi	15.2	15.3
Gain Over all Tilts	dBi	14.7 +/- 0.5	14.8 +/- 0.5
Azimuth Beamwidth 3dB	Deg	78.4 +/- 7.4	70.8 +/- 4.6
Elevation Beamwidth 3dB	Deg	7 +/- 1	6.6 +/- 0.5
Cross Polar Discrimination at Boresight	dB	20.9	19.9
Cross Polar Discrimination over Sector	dB	12	13
F/B at +/-30deg Total Power	dB	19	21
First Upper Side Lobe Suppression	dB	16	16.8
Electrical Downtilt	Deg	2 to 12	
VSWR	-	1.5	

ELECTRICAL SPECIFICATIONS

Electrical Specification Header		Radiation Parameter - Broad casting Beam (3300-3800 MHz) [P1]	
Frequency Band	MHz	3300-3600	3600-3800
Gain Typical	dBi	16.4	16.4
Gain Over all Tilts	dBi	15.4 +/- 1	15.4 +/- 1
Azimuth Beamwidth 3dB	Deg	61.5 +/- 7.7	59 +/- 7.8
Elevation Beamwidth 3dB	Deg	7 +/- 1	6.7 +/- 0.5
F/B at +/-30deg Total Power	dB	21.9	20.8
First Upper Side Lobe Suppression	dB	16	15.4
Electrical Downtilt	Deg	2 to 12	
VSWR	-	1.5	

ELECTRICAL SPECIFICATIONS

Electrical Specification Header		Radiation Parameter - Working Beam (3300-3800 MHz) [P1]	
Frequency Band	MHz	3300-3600	3600-3800
Gain Typical	dBi	21	20.7
Gain Over all Tilts	dBi	20.5 +/- 0.5	20.2 +/- 0.5
Azimuth Beamwidth 3dB	Deg	21.6 +/- 0.7	20.4 +/- 0.6
Elevation Beamwidth 3dB	Deg	7 +/- 1	6.6 +/- 0.5
F/B at +/-30deg Total Power	dB	27	
First Upper Side Lobe Suppression	dB	17	
Electrical Downtilt	Deg	2 to 12	
VSWR	-	1.5	

All values nominal unless tolerances provided; information contained in the present datasheet is subject to confirmation at time of ordering.

APXVB4LTY16AB_43-C-I20

Hybrid FDD/TDD Antenna, X-Pol, 1.6m, 10-ports FDD 1x 698-960/4x 1710-2690, 65deg, 8T8R 3300-3800MHz, 90deg unit beam, Integrated RET

ELECTRICAL SPECIFICATIONS

Impedance	Ohm	50
Polarization	Deg	±45°

MECHANICAL SPECIFICATIONS

Dimensions - H x W x D	mm (in)	1650 x 429 x 199 (65 x 16.9 x 7.8)
Weight (Antenna Only)	kg (lb)	28 (61.7)
Weight (Mounting Hardware only)	kg (lb)	4.5 (9.9)
Packing size- HxWxD	mm (in)	1920 x 525 x 295 (75.6 x 20.7 x 11.6)
Shipping Weight	kg (lb)	39.5 (87.1)
Connector type		19 x 4.3-10 female bottom + 2 AISG connectors (1 male, 1 female)
Radome Material / Color		Fiber Glass / Light Grey RAL7035

TESTING AND ENVIRONMENTAL

Temperature Range	°C (°F)	-40 to 60 (-40 to 140)
Lightning protection		DC Ground
Survival/Rated Wind Velocity	km/h	200 (150)

ORDERING INFORMATION

Order No.	Configuration	Mounting Hardware	Mounting pipe Diameter	Shipping Weight
APXVB4LTY16AB_43-C-I20	Internal RET(ACU-I20-B6)	APM50-B1	50-110mm	39.5 kg

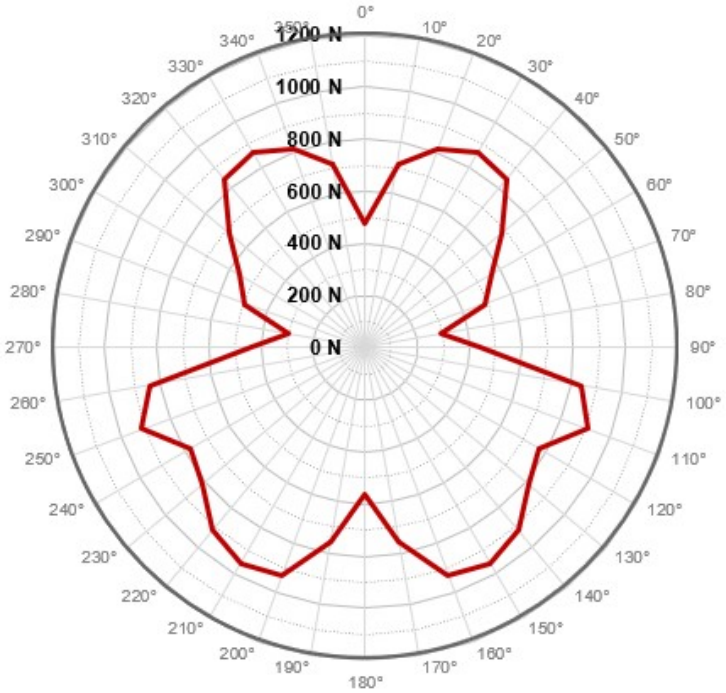

Rated Wind Speed, Km/h	150
Wind Load Frontal, Resultant, N	476
Wind Load Side, Resultant, N	440
Wind Load Rear, Resultant, N	565
Maximum Wind Load, Resultant, N	955
Maximum Wind Load, Drag Force, N	841

All values nominal unless tolerances provided; information contained in the present datasheet is subject to confirmation at time of ordering.

APXVB4LTY16AB_43-C-I20

Hybrid FDD/TDD Antenna, X-Pol, 1.6m, 10-ports FDD 1x 698-960/4x 1710-2690, 65deg, 8T8R 3300-3800MHz, 90deg unit beam, Integrated RET

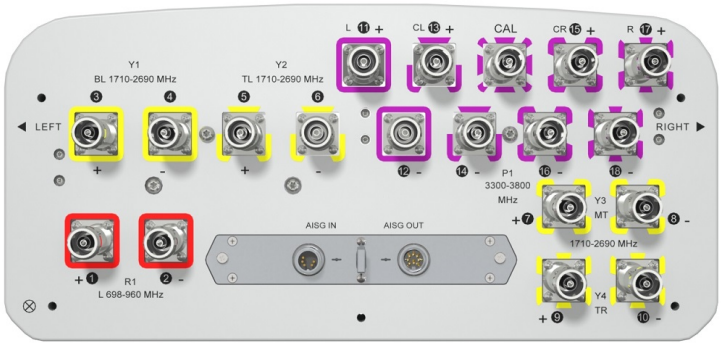

Port	Array	Frequency	RET	AISG RET UID
1	R1	698-960 MHz	R1	RFxxxxxxxxxxx-R1
2				
3	Y1	1710-2690 MHz	Y1	RFxxxxxxxxxxx-Y1
4				
5	Y2	1710-2690 MHz	Y2	RFxxxxxxxxxxx-Y2
6				
7	Y3	1710-2690 MHz	Y3	RFxxxxxxxxxxx-Y3
8				
9	Y4	1710-2690 MHz	Y4	RFxxxxxxxxxxx-Y4
10				
11	P1	3300-3800 MHz	P1	RFxxxxxxxxxxx-P1
12				
13				
14				
15				
16				
17				
18				

NOTE: RET motors will tilt one at a time, not simultaneously

All values nominal unless tolerances provided; information contained in the present datasheet is subject to confirmation at time of ordering.

APXVB4LTY16AB_43-C-I20

Hybrid FDD/TDD Antenna, X-Pol, 1.6m, 10-ports FDD 1x 698-960/4x 1710-2690, 65deg, 8T8R 3300-3800MHz, 90deg unit beam, Integrated RET

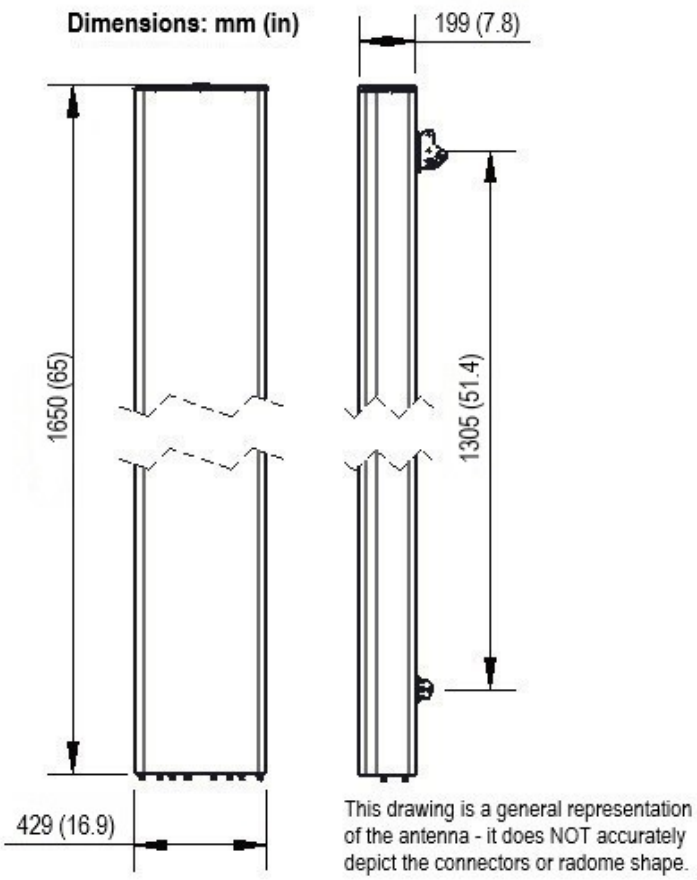

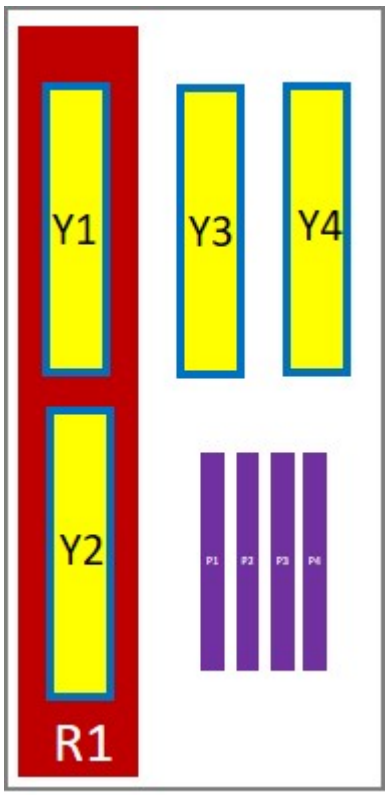

External Document Links

APM50_Series_Installation_Instructions

Notes

- All electrical parameters are compliant with BASTA NGMN 12.0 requirements.
- For additional mounting information please click "External Document Links".

- **Radiating patterns:** Request pattern files

All values nominal unless tolerances provided; information contained in the present datasheet is subject to confirmation at time of ordering.