PRODUCT DATASHEET

NM-TNCF

Coaxial Adapter N male - TNC female

Coaxial Adapter N male - TNC female

FEATURES / BENEFITS



External Document Links

Notes

Technical features

STRUCTURE

Product Line		Coaxial Cable Components
Product Type		Coaxial Adapter
Coaxial Cable Type		Foam Dielectric, Ultraflexible Foam Dielectric , Radiating Cable

MECHANICAL SPECIFICATIONS

Connector A		N Male
Center Contact Connector A		Brass, silver plated
Outer Contact Connector A		Brass, silver plated
Connector B		TNC Female
Center Contact Connector B		Brass, silver plated
Outer Contact Connector B		Brass, silver plated
Body		Brass, silver plated
Dielectric		PTFE
Gasket		Silicone rubber
Sealing class		IP68

ELECTRICAL SPECIFICATIONS

Frequency Range - MHz		DC - 11000
VSWR, Return Loss	VSWR (dB)	0-1000 MHz: 1.04 (34) 1000 - 3000MHz: 1.06 (30.7) 3000 - 3700 MHz: 1.12 (25)
Insertion Loss, dB (Max)	dB	0.02

TEMPERATURE SPECIFICATIONS

Operation Temperature	°C (°F)	-45 to 85 (-49 to 185)

PACKAGING INFORMATION

Package Quantity		1

All values nominal unless tolerances provided; information contained in the present datasheet is subject to confirmation at time of ordering

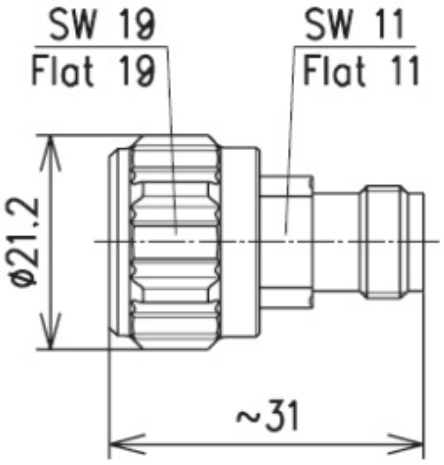

All values nominal unless tolerances provided; information contained in the present datasheet is subject to confirmation at time of ordering